ALUBOND FACADE

- installation -

Installation

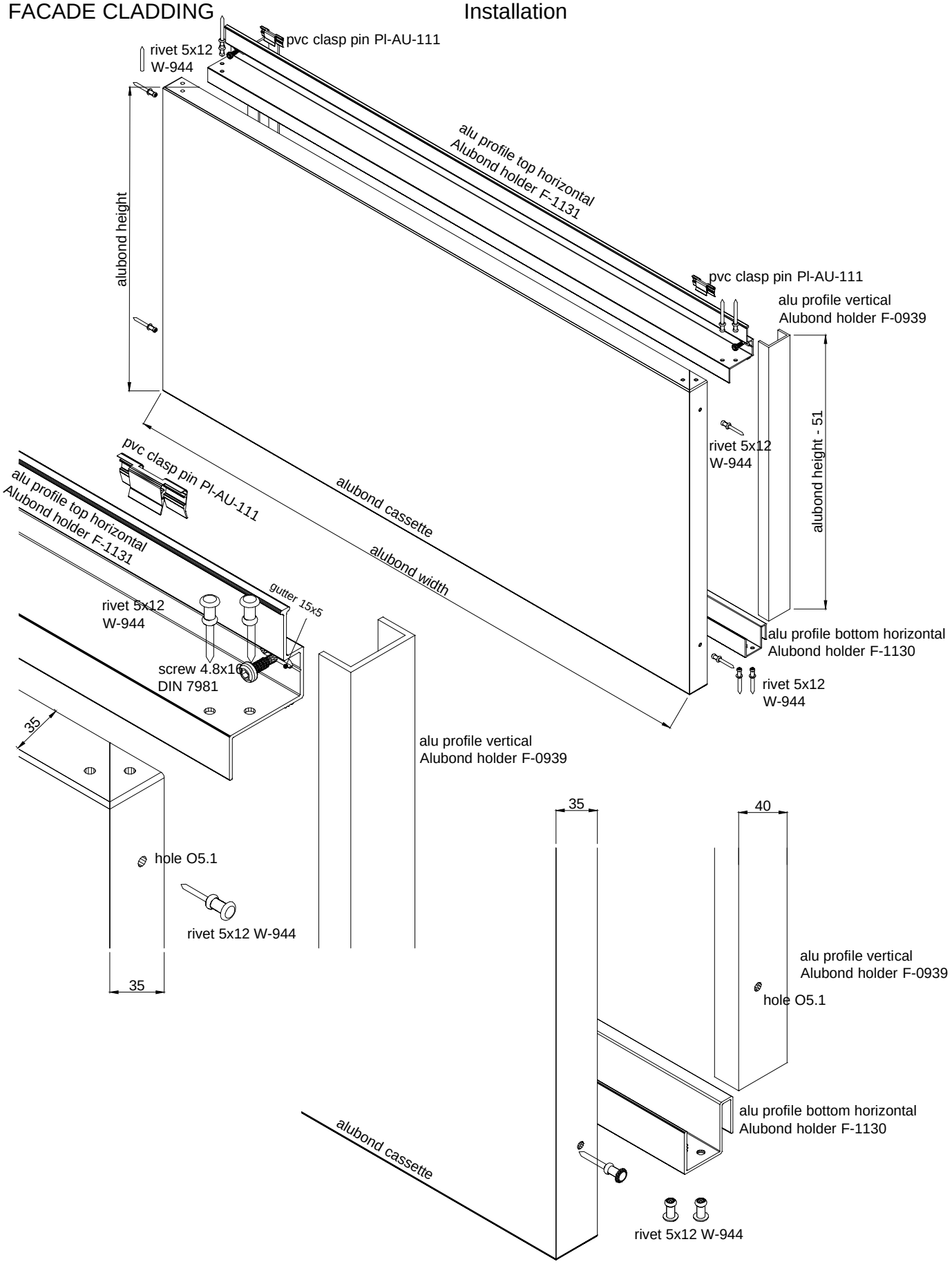

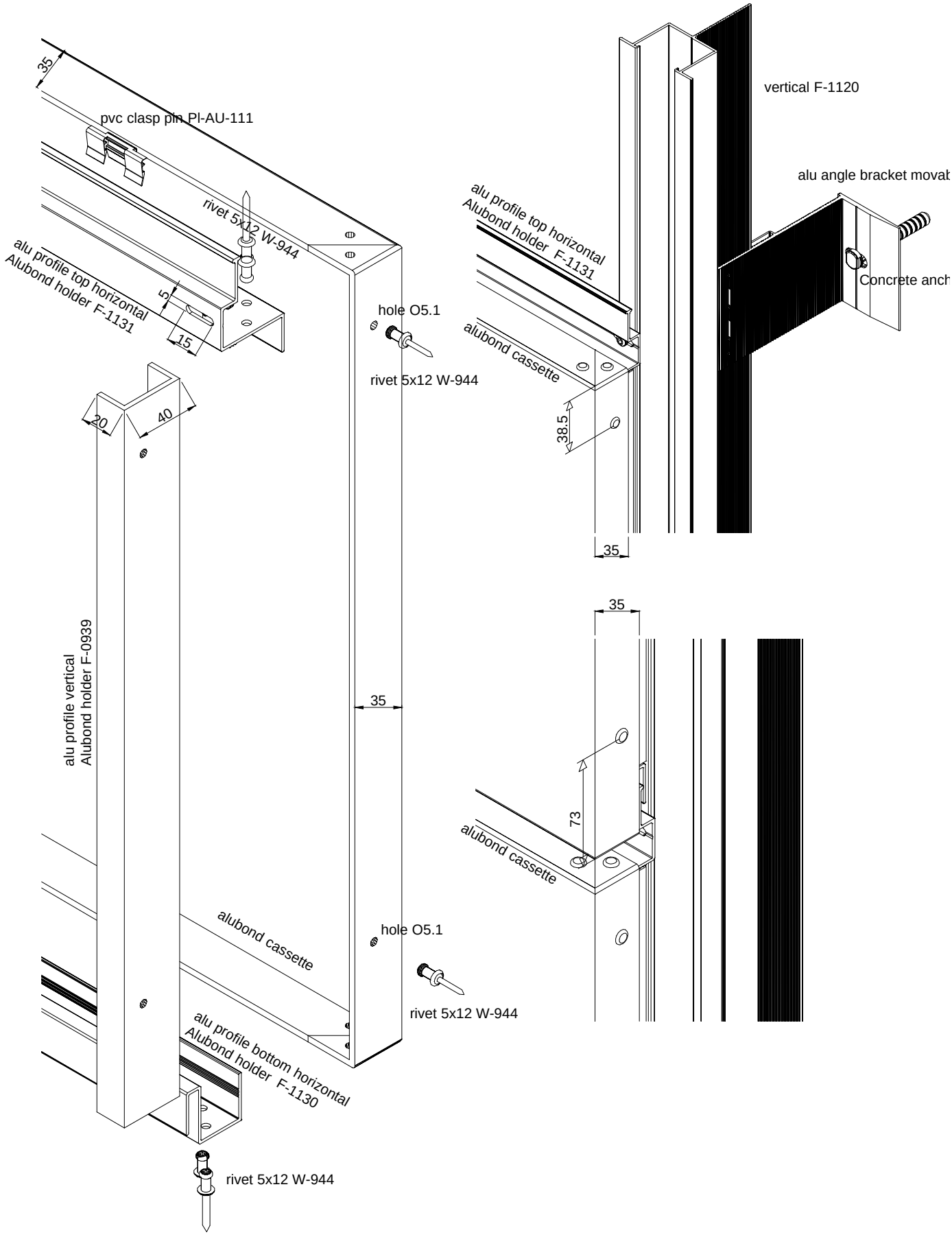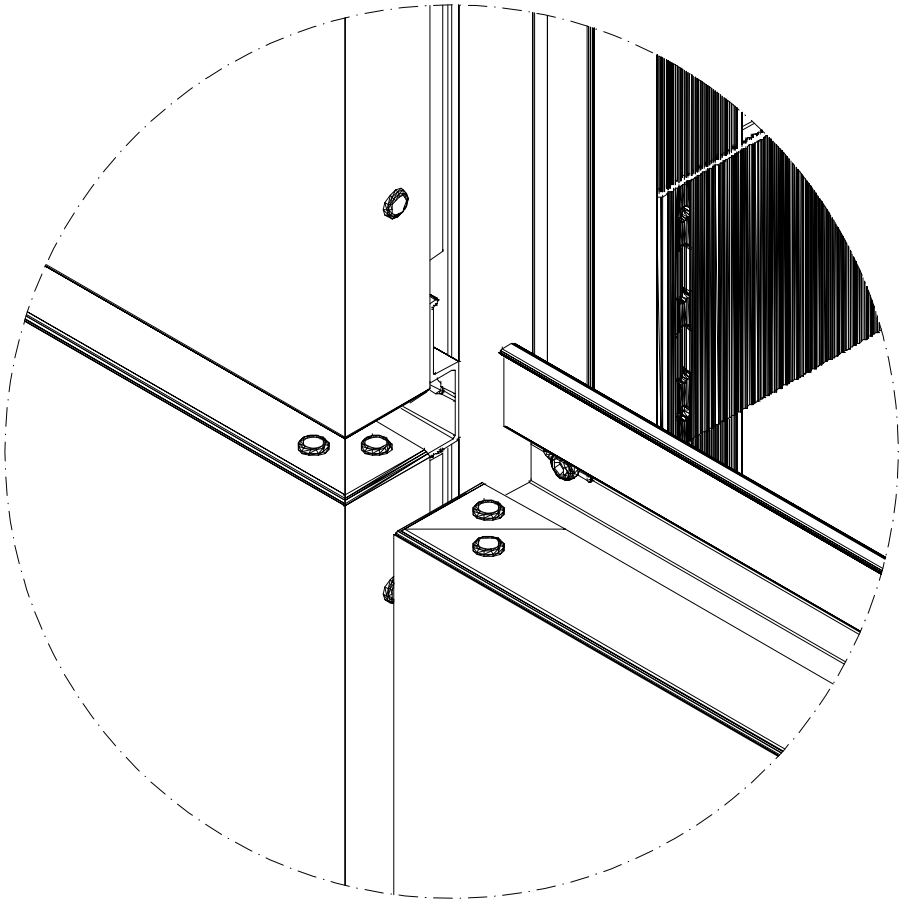
35
pvc clasp pin Pl-AU-111
rivet 5x12 W-944
alu profile top horizontal
Alubond holder F-1131
5
15
hole O5.1
rivet 5x12 W-944
20
40
35
alu profile vertical
Alubond holder F-0939
alubond cassette
hole O5.1
rivet 5x12 W-944
alu profile bottom horizontal
Alubond holder F-1130
rivet 5x12 W-944
vertical F-1120
alu angle bracket movab
alu profile top horizontal
Alubond holder F-1131
Concrete anch
alubond cassette
38.5
35
35
73
alubond cassette